TYPE	A	B	C	D	E	F	G
R 125 EMC	142	80	79	125	148	10	72
R 127 EMC	142	80	79	127	148	10	72
R 150 EMC	165	90	85	150	171	13	73
R 200 EMC	215	120	85	200	223	13	73

MATERIAL: STAINLESS STEEL
MATERIAL: HOT DIP GALVANIZED STEEL
SURFACE TREATMENT: ED COAT. RAL9005

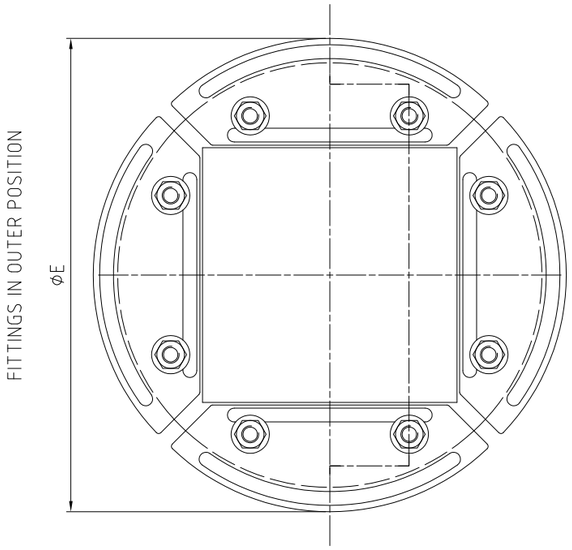

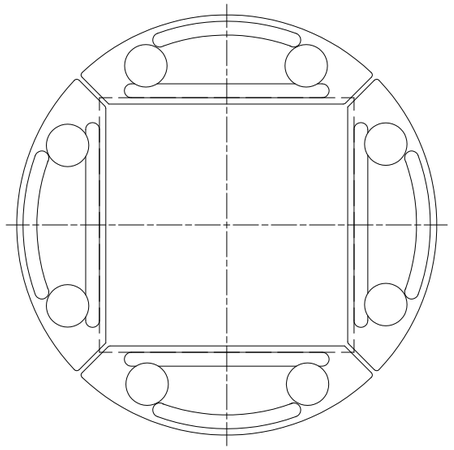

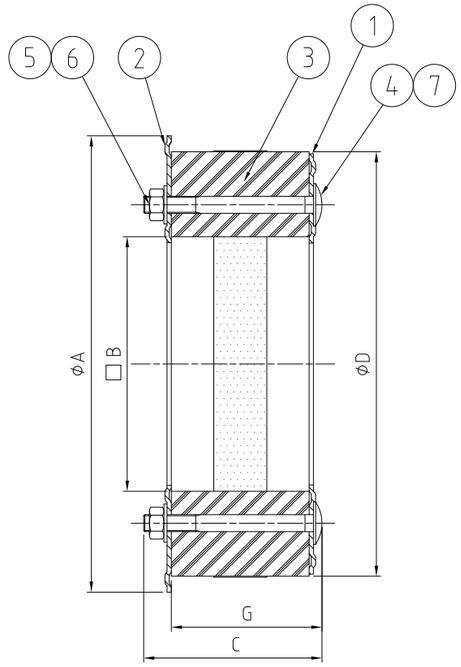

A-A

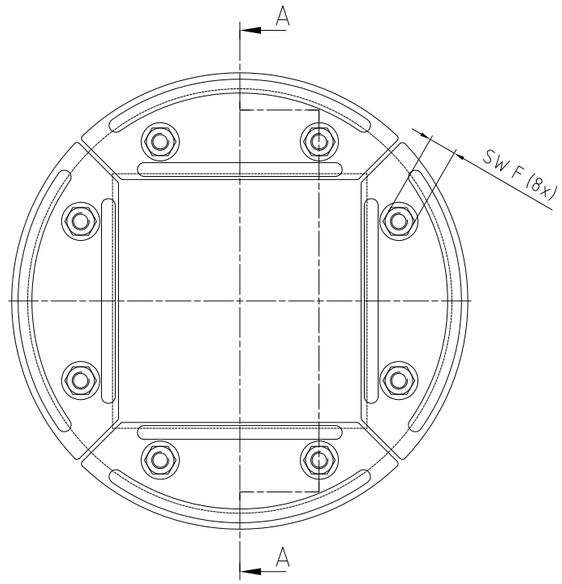

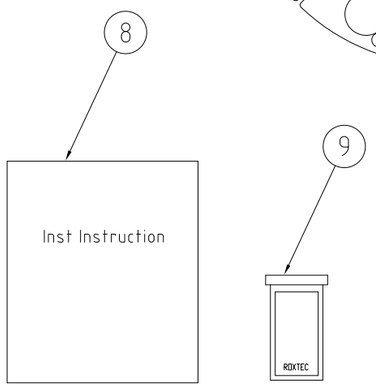

Item	Qty	Designation	Specification	NetWeight
9	1	LUBRICANT		–
8	1	INSTALLATION INSTRUCTION		–
7	8	GASKET MVBF		–
6	8	WASHER		–
5	8	NUT		–
4	8	OVAL HEAD SCREW		–
3	1	RUBBER FRAME		–
2	4	FRONT FITTING		–
1	4	REAR FITTING		–

General tolerance: ISO 2768-1/2-m/K, EN ISO 13920-BF
Welded details: EN ISO 5817-B, EN ISO 10042-B
General surface roughness, Ra 12.5
Designed by: se-joahel — Created Date: 2003-12-29
Approved by: se-jenboh — Approved Date: 2014-04-24
Format: A2 — Scale: 1:2
TotWeight
Projection method

Roxtec
www.roxtec.com

Title: R 125-200 EMC ASSEMBLY
Restricted due to: Information Drawing
Drawing number: S1005778
Rev: C

Rev	Type of revision	Date	Sign
C	POS 8 & 9 ADDED	2014-04-10	se-emikul

All rights reserved. Unauthorized reproduction, use or disclosure to third parties is strictly forbidden.
洛克塞克保留所有权利。未经授权严禁复制，使用以及向第三方泄漏。